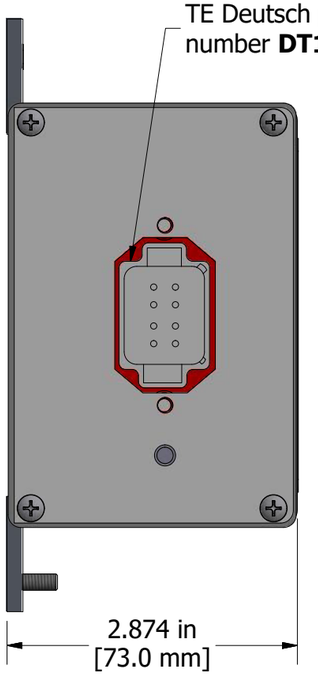

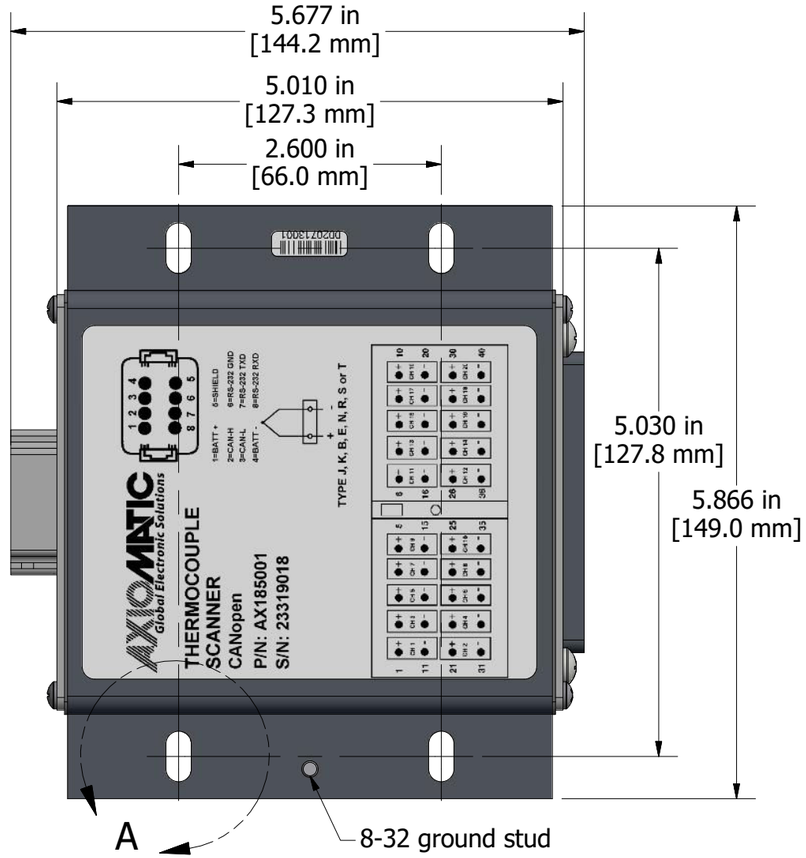

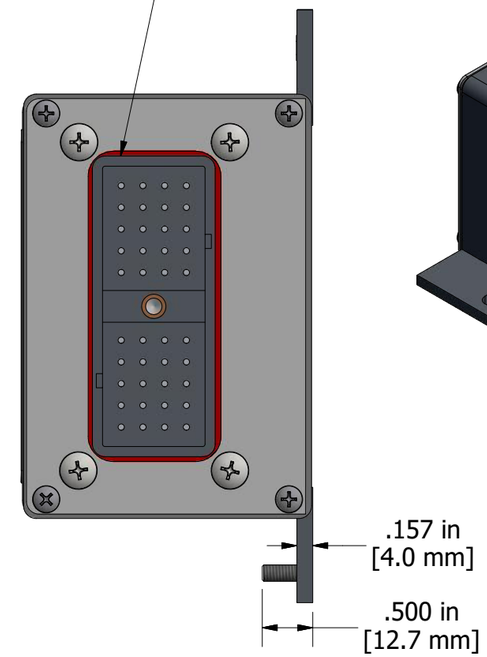

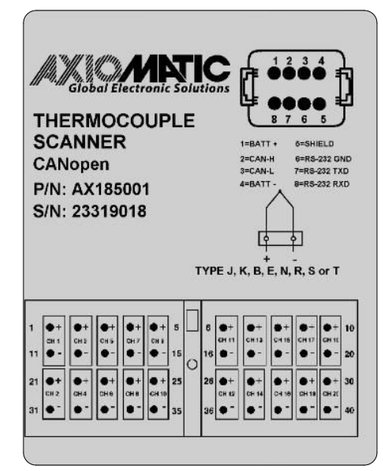

unit label detail

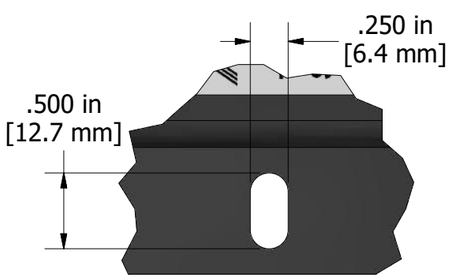

DETAIL A
SCALE 1
4 places

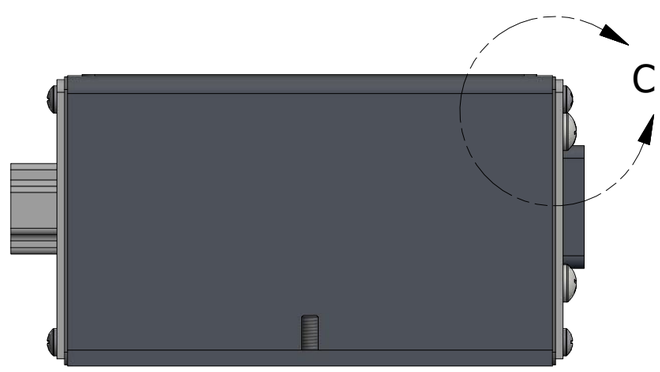

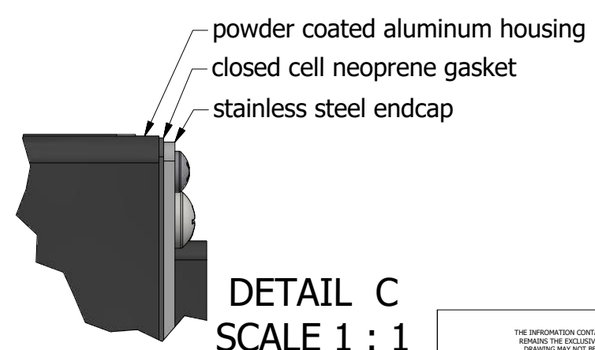

DETAIL C
SCALE 1 : 1

PROPRIETARY
THE INFROMATION CONTAINED IN THIS DRAWING IS CONDIFENTIAL AND PROPRIETARY AND REMAINS THE EXCLUSIVE PROPERTY OF AXIOMATIC TECHNOLOGIES CORPORATION. THIS DRAWING MAY NOT BE USED, REPRODUCED IN WHOLE OR IN PART, NOR REVEALED TO OTHERS WITHOUT THE PRIOR WRITTEN CONSENT OF AXIOMATIC TECHNOLOGIES CORPORATION. BY ACCEPTANCE OF THIS DRAWING, THE BEARER AGREES TO THE THESE CONDITIONS.

AXIOMATIC TECHNOLOGIES CORPORATION
5915 WALLACE ST.
MISSISSAUGA, ON
CANADA L4Z1Z8
905-602-9270

TOLERANCES INCH

fabrication		machining	
X.XXX	+/- 0.015	X.XXX	+/- 0.001
X.XX	+/- 0.031	X.XX	+/- 0.005
X.X	+/- 0.031	X.X	+/- 0.015
fractional	+/- 0.031	fractional	+/- 0.031

MATERIAL	DRAWN TF	DATE 2017-03-10	TITLE 20 Channel Thermocouple, CANopen		
FINISH	CHECKED DL	DATE	DWG REV D1	DWG NO AX185001-MD	PART REV A
	APPROVED DL	DATE	SCALE full	PART NO AX185001	SHEET 1 of 1